SIMPLY STAINLESS

Modular Sinks, Tables & Shelving

06-6-1200

*Units 1200mm & 1500mm have 4 legs.

06-7-1800

*Units 1800mm & 2100mm have 6 legs.

06-7-2400

* Unit 2400mm have 6 legs.

SPECIFICATION	
Tops	- High quality 304 grade stainless steel. - 1.2mm gauge, no. 4 Finnish. - Welded bowl w/sink waste, 100mm upstand (150mm bevelled upstand on 700 series). - 20mm wet edge. - 2 pcs. 60 litre bowl (450x450x300mm). - 2 pcs. 81 litre bowl (600x450x300mm). - Supplied with 2x Watermark approved 90mm waste with basket.
Core	- 1.2mm gauge stainless steel top hat channel. - Stainless steel collars.
Frames	- Ø38mm round stainless steel tube. - Satin polished. - Machined collars. - Adjustable stainless disc feet.
Potrail	- Stainless steel round & square tube

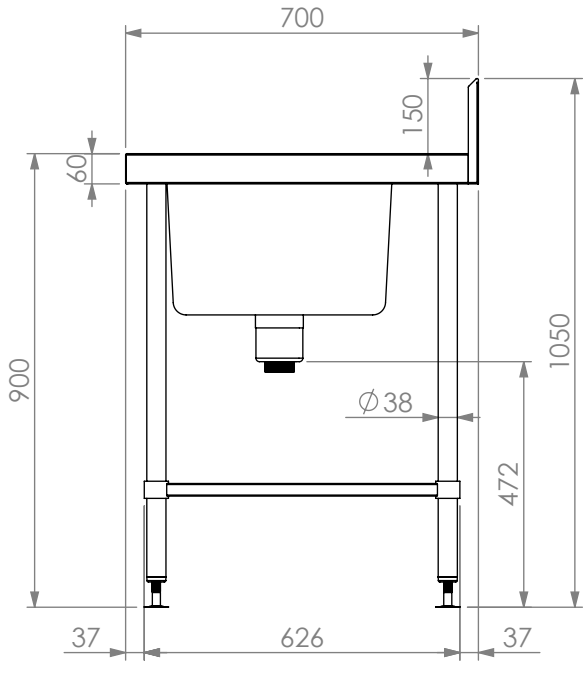

*700mm DEEP MODULE ELEVATION.

	Double Bench Bowl				
	Product Code	**Bowl**	**Dimensions (mm)**	**Unit weight (Kg)**	**Load capacity (Kg)**
06	06-6-1200	450x450x300	1200x600x900	36.42	80
	06-6-1500	450x450x300	1500x600x900	41.06	80
	06-6-1800	450x450x300	1800x600x900	48.91	120
	06-6-2100	450x450x300	2100x600x900	50.76	160
	06-6-2400	600x450x300	2400x600x900	56.52	160
	06-7-1200	450x450x300	1200x700x900	39.65	80
	06-7-1500	450x450x300	1500x700x900	44.41	80
	06-7-1800	450x450x300	1800x700x900	53.53	120
	06-7-2100	450x450x300	2100x700x900	58.2	160
	06-7-2400	600x450x300	2400x700x900	62.5	160

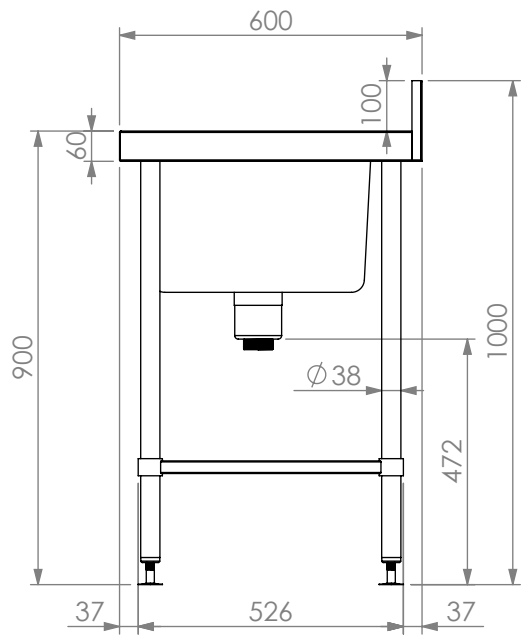

*600mm DEEP MODULE ELEVATION.

100% RECYCLABLE STAINLESS STEEL